LAYOUT CONCEPTS

NCE PowerPro 5 Amp DCC System & 18V Regulated DC PSU With Alpha Switch-D & Alpha Encoder Unit

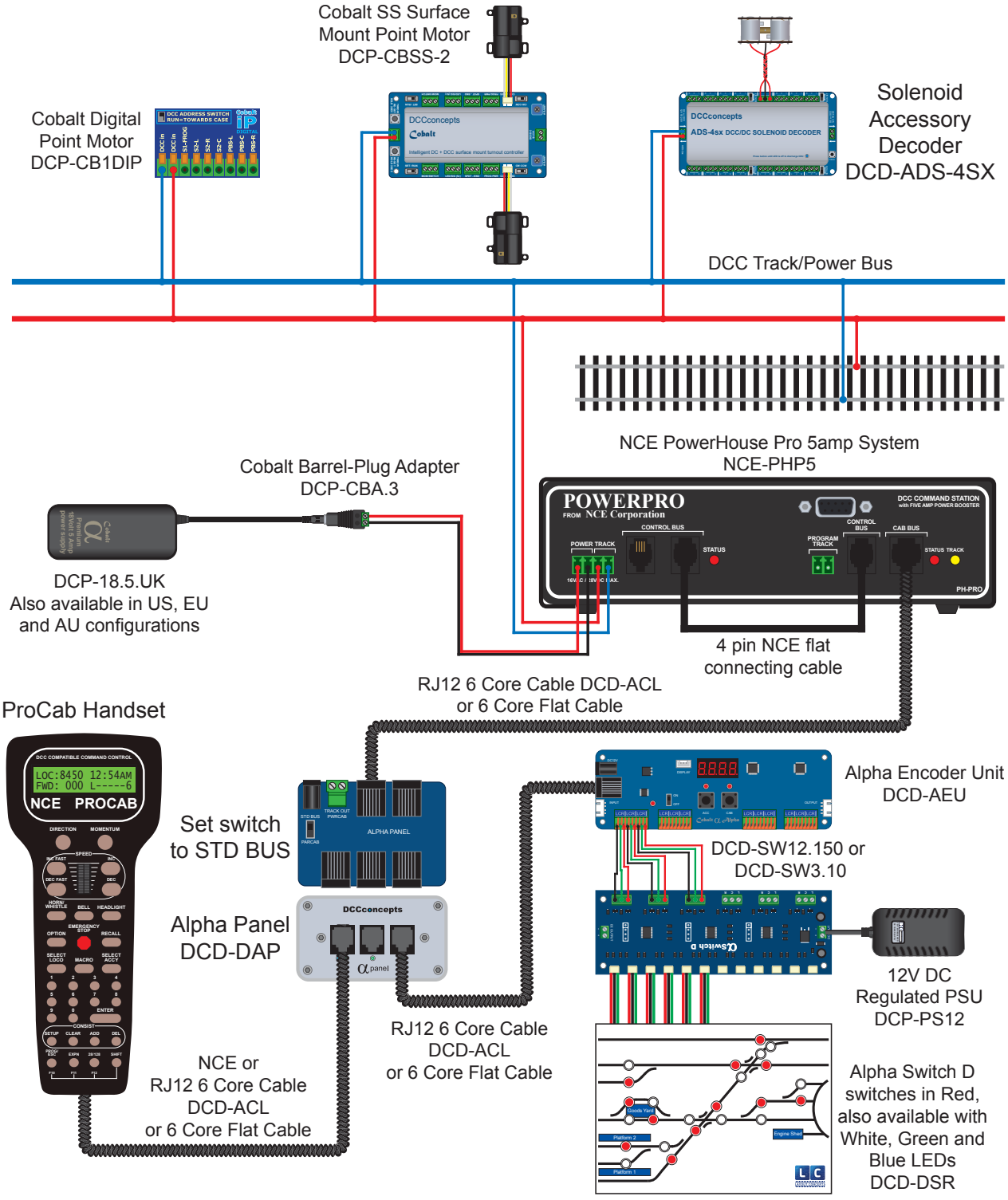

Layout Concepts Ltd, Unit E, The Sidings, Settle, BD24 9RP, United Kingdom - www.layoutconcepts.com - +44 (0) 1729 821 080 - sales@layoutconcepts.com