LAYOUT CONCEPTS
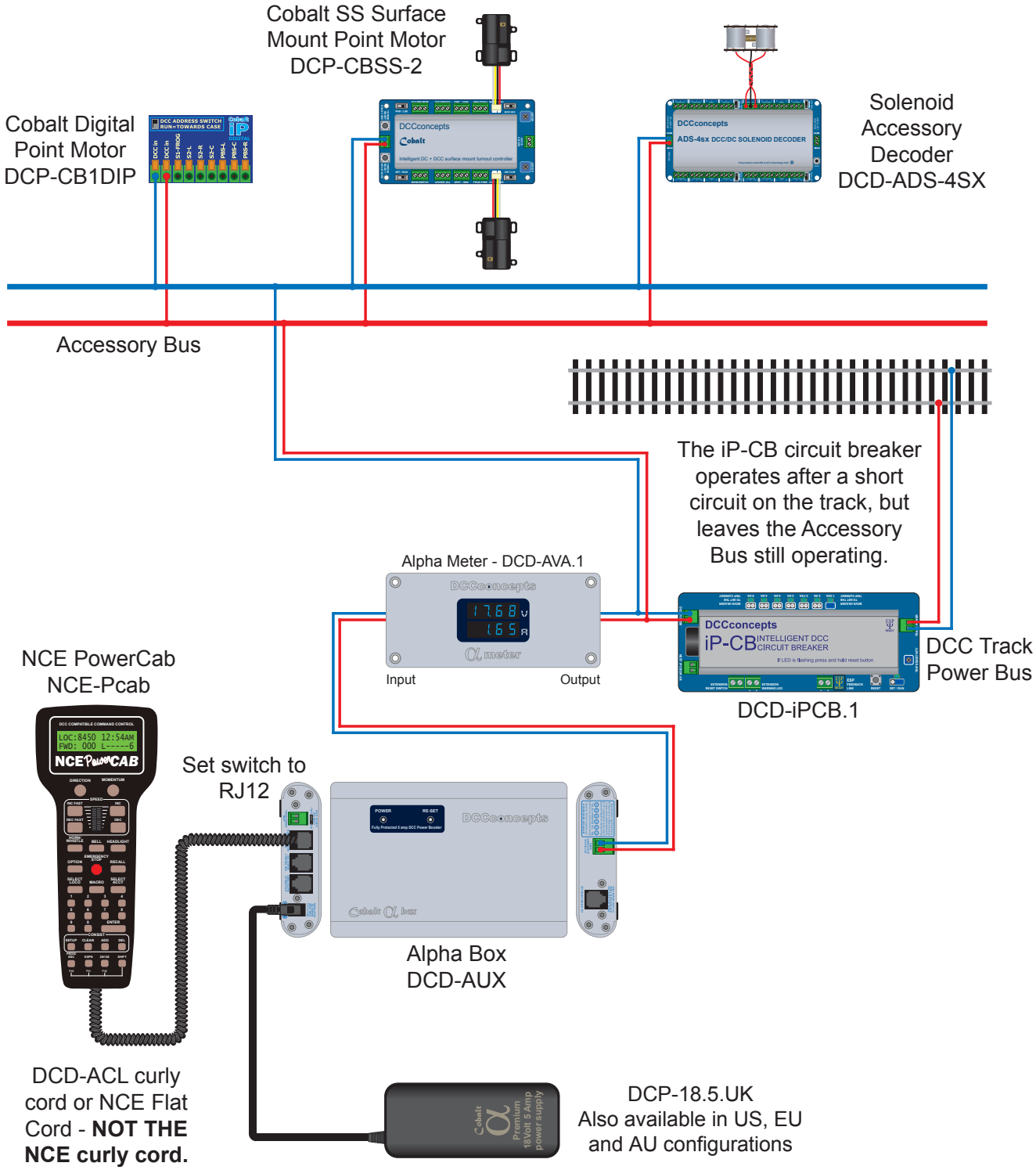
NCE PowerCab With Alpha Box & 18V Regulated DC PSU & iP-CB Circuit Breaker & Alpha Meter & Accessory Bus