LAYOUT CONCEPTS
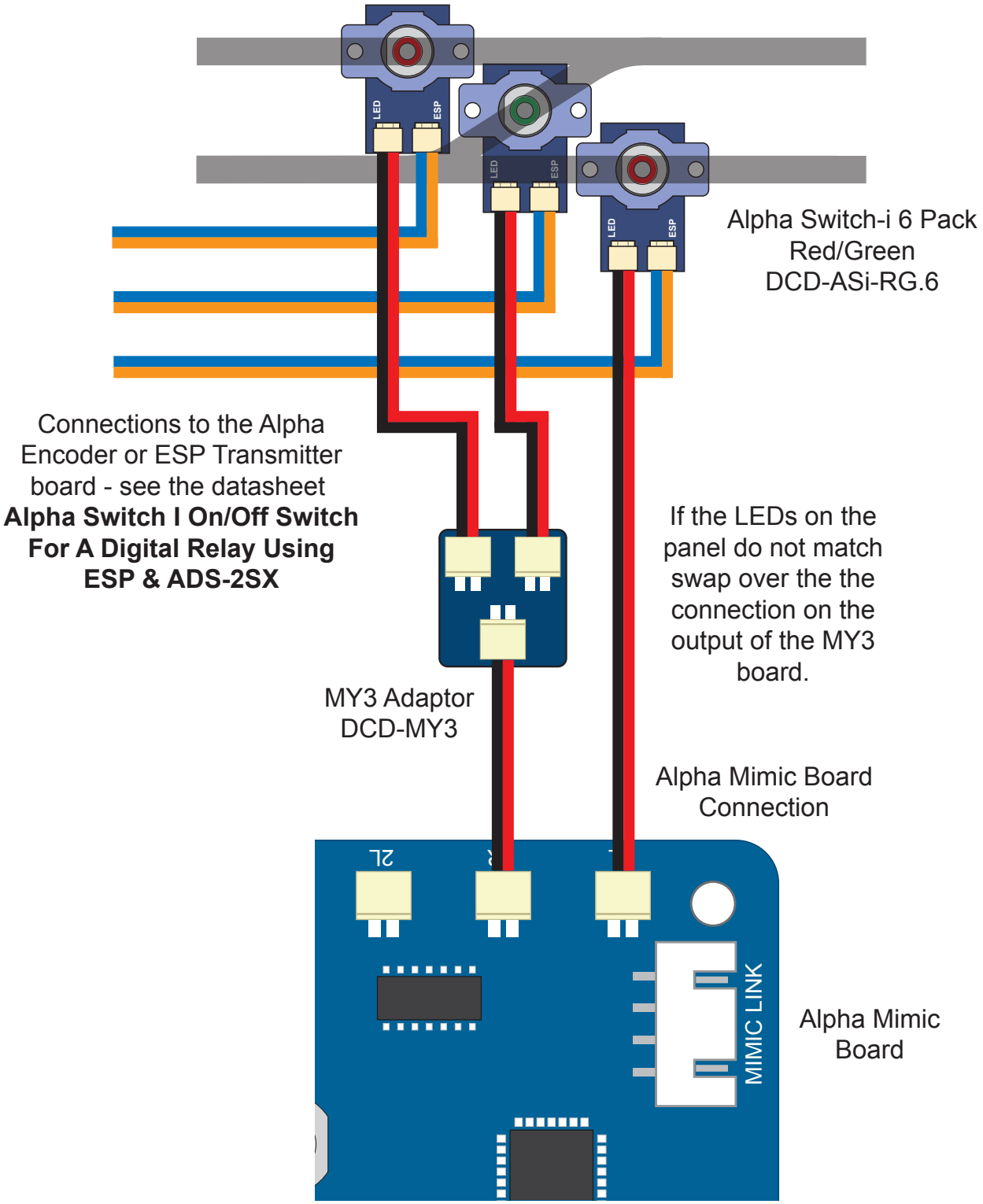
Alpha Switch-I Crossover LED Configuration Using MY3 Adaptor