LAYOUT CONCEPTS

Alpha Switch-I On/Off Switches Controlling Cobalt iP Digital Point Motors With Alpha Mimic & ESP

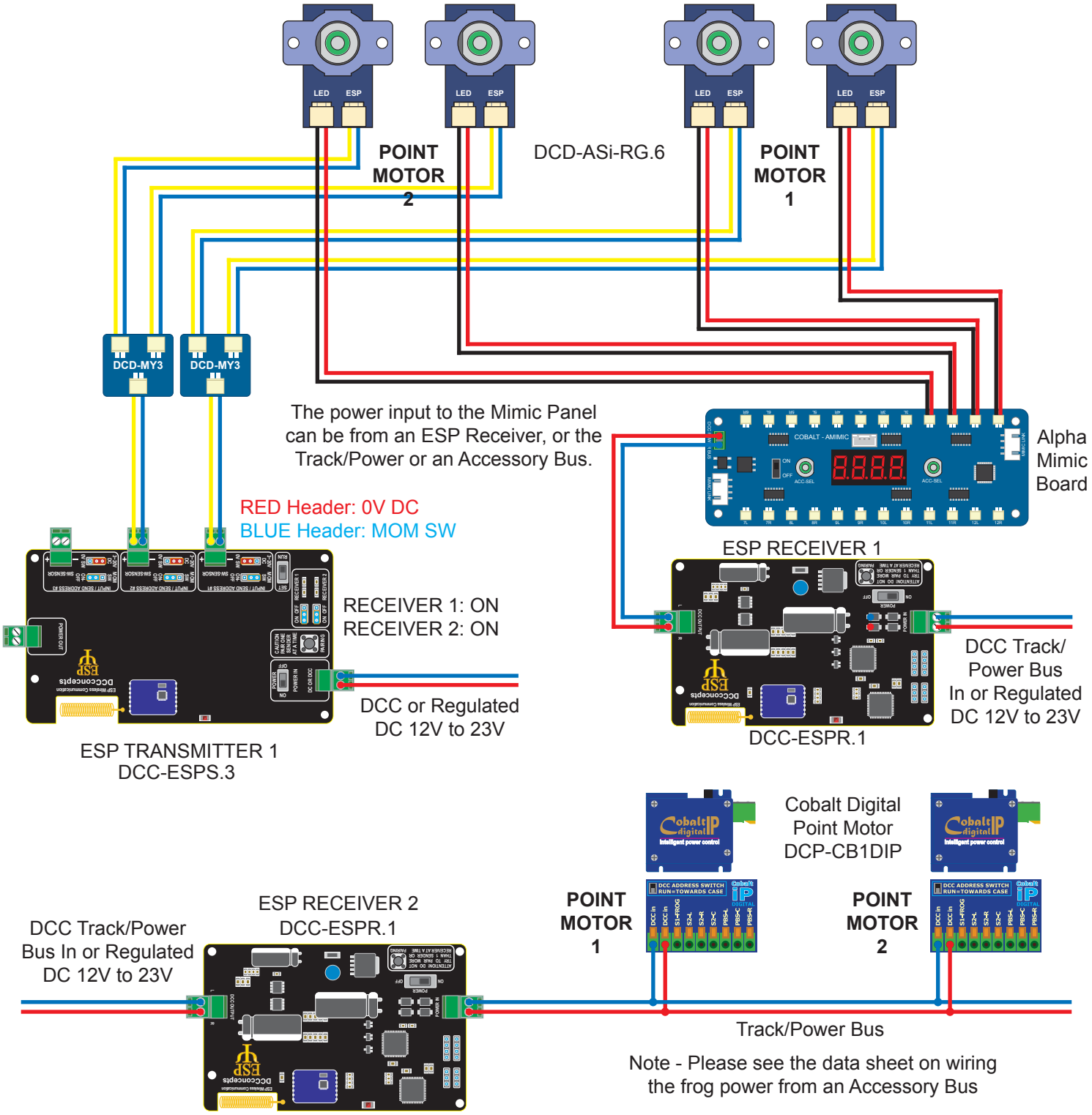

Note - Please see the data sheet on wiring the frog power from an Accessory Bus