LAYOUT CONCEPTS
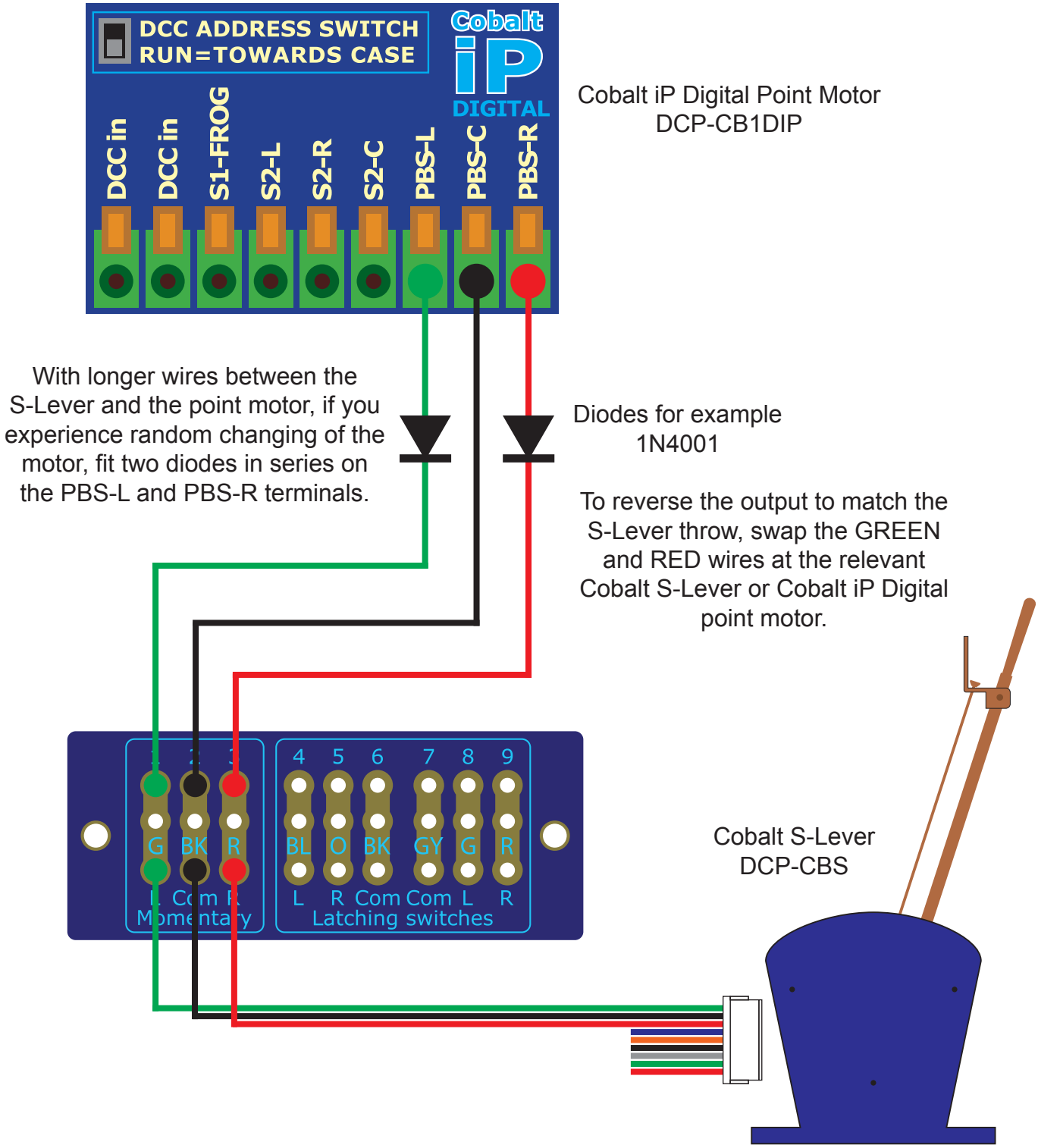
Cobalt iP Digital Point Motor Controlled By Cobalt S-Lever With Long Wires & Diodes