LAYOUT CONCEPTS

Cobalt S-Lever Controlling Peco Solenoid Point Motors Using A CDU

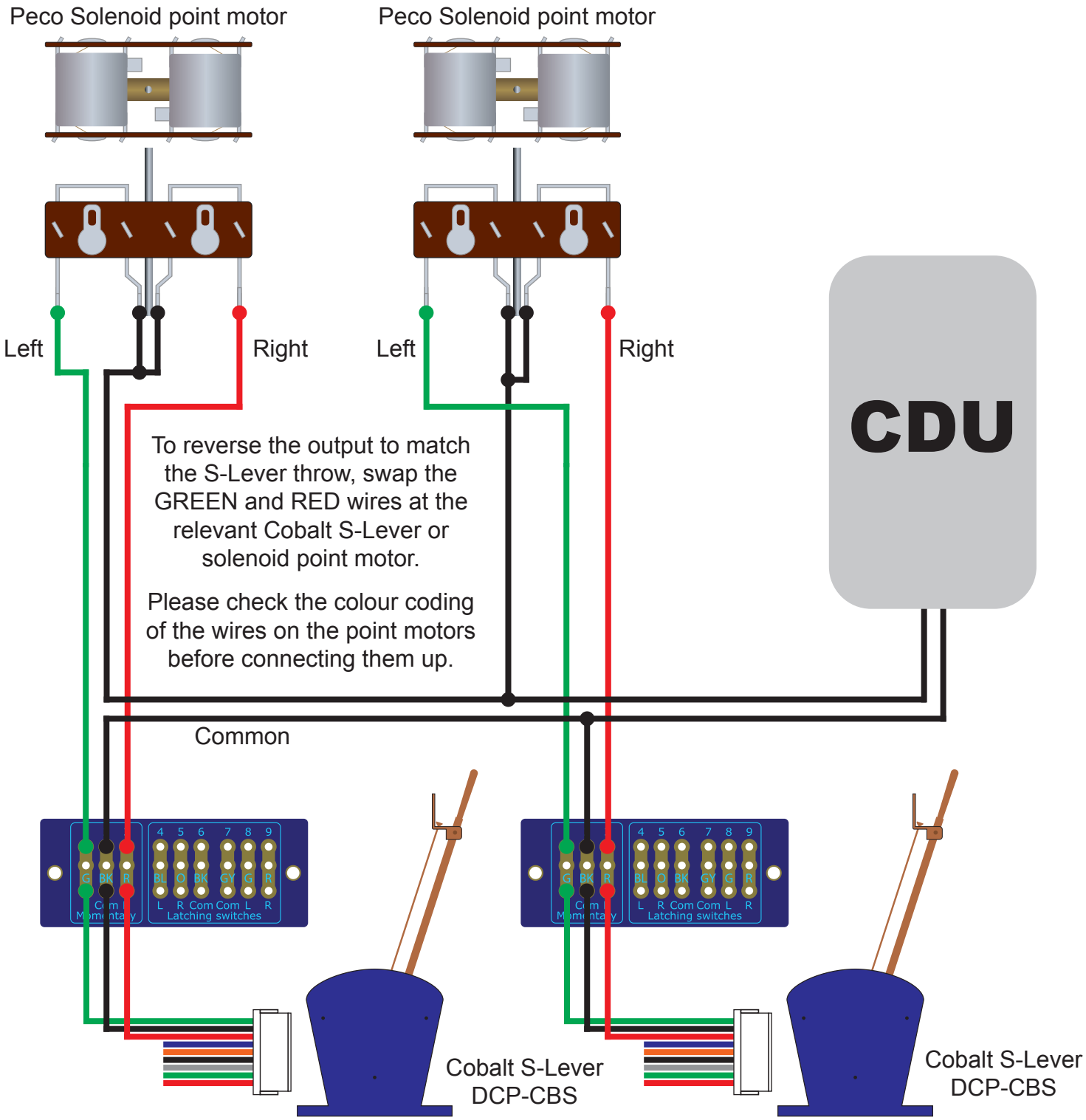

Layout Concepts Ltd, Unit E, The Sidings, Settle, BD24 9RP, United Kingdom - www.layoutconcepts.com - +44 (0) 1729 821 080 - sales@layoutconcepts.com