LAYOUT CONCEPTS

NCE PowerCab & Alpha Encoder Unit & Alpha Mimic Board & Cobalt S-Levers

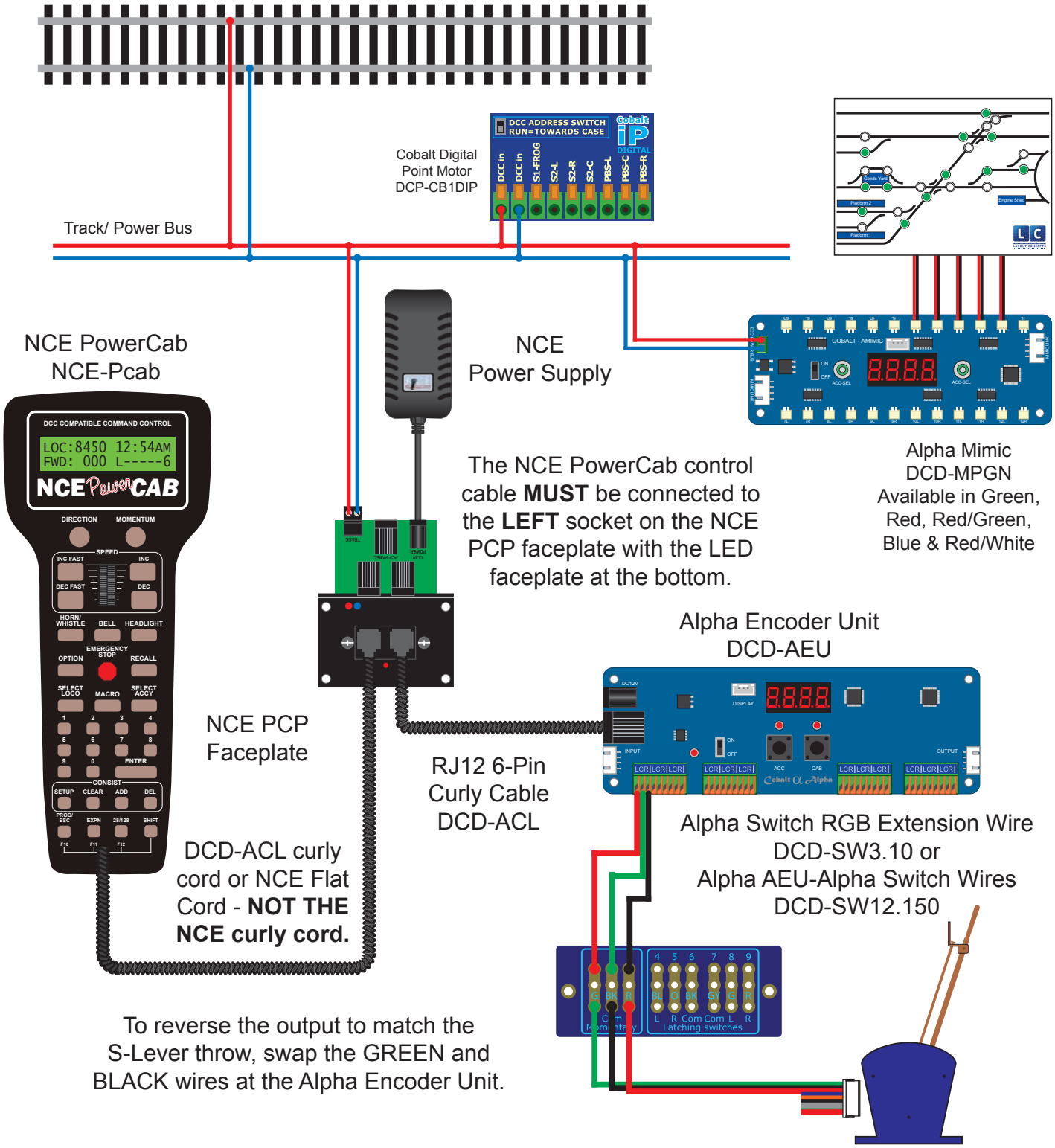

Layout Concepts Ltd, Unit E, The Sidings, Settle, BD24 9RP, United Kingdom - www.layoutconcepts.com - +44 (0) 1729 821 080 - sales@layoutconcepts.com