LAYOUT CONCEPTS
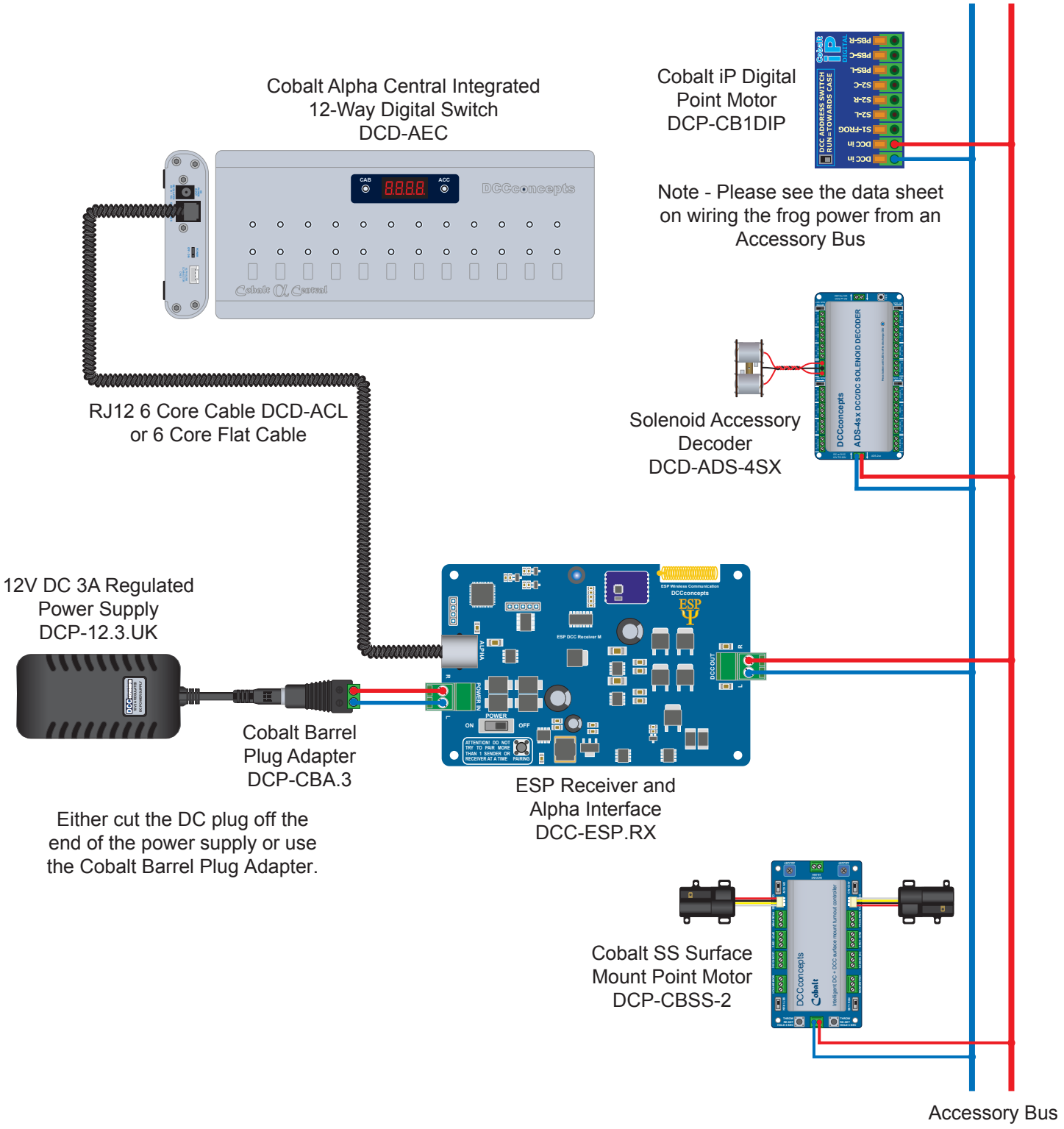
ESP Receiver & Alpha Interface With An Accessory Bus & Alpha Central & 12V Regulated PSU