LAYOUT CONCEPTS

NCE PowerCab With Alpha Mimic & Alpha Panel & Alpha Central

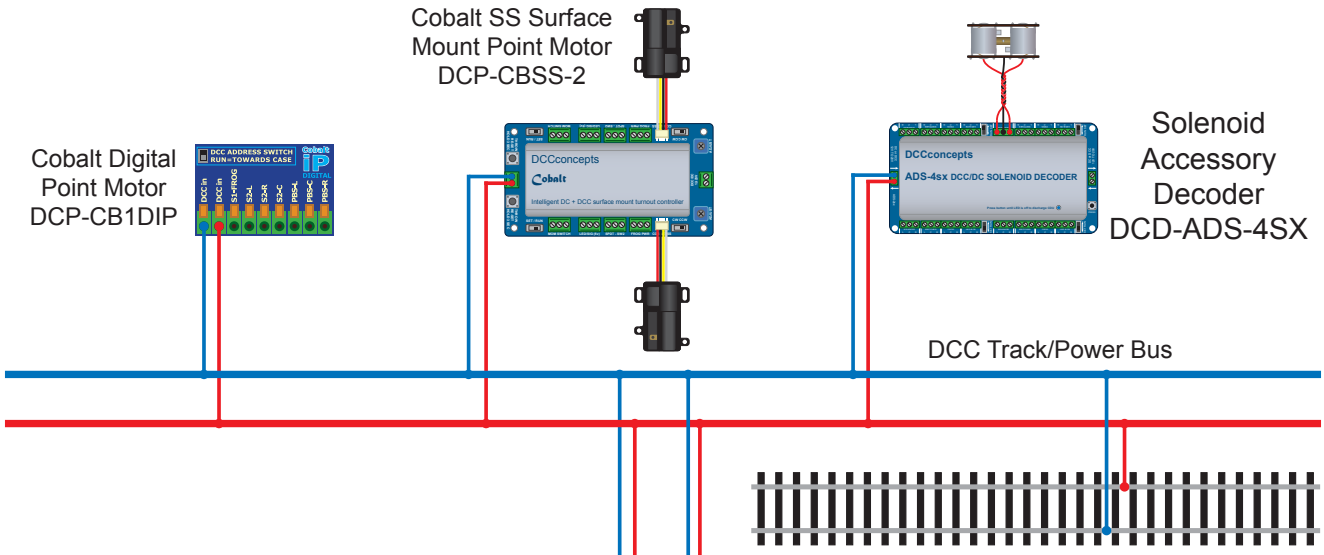

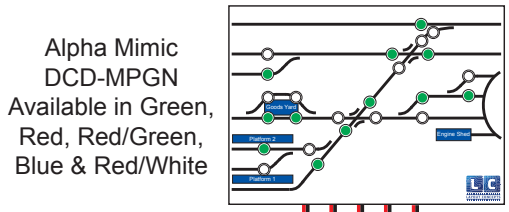

Alpha Mimic DCD-MPGN Available in Green, Red, Red/Green, Blue & Red/White

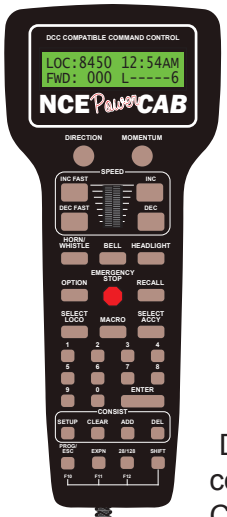

NCE Power Supply

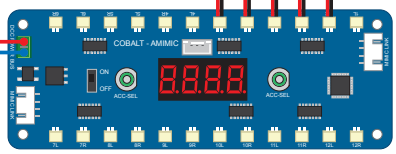

Set switch to PARCAB

Alpha Panel DCD-DAP

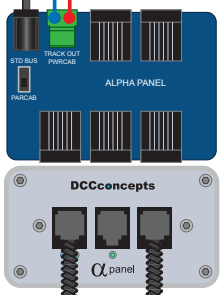

Make sure the Alpha Central is switched ON with small switch on the left hand side of the unit.

DCD-ACL curly cord or NCE Flat Cord - **NOT THE NCE curly cord.**

Alpha Central DCD-AEC

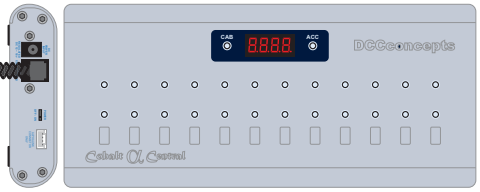

Curly cable in the Alpha Central box

The NCE PowerCab control cable **MUST** be connected to the **LEFT** socket on the NCE PCP faceplate with the LED faceplate at the bottom.

The Alpha Central curly cable can also be plugged into either of the rear sockets on the Alpha Panel.