LAYOUT CONCEPTS

Cobalt iP Analog Point Motors Control Using On/On Toggle Switches & SPS12 PSU

Cobalt iP Analog Point Motor
DCP-CB1iP

The frog wires to S2-C and dropper wires from the track to S2-L and S2-R have been omitted for clarity

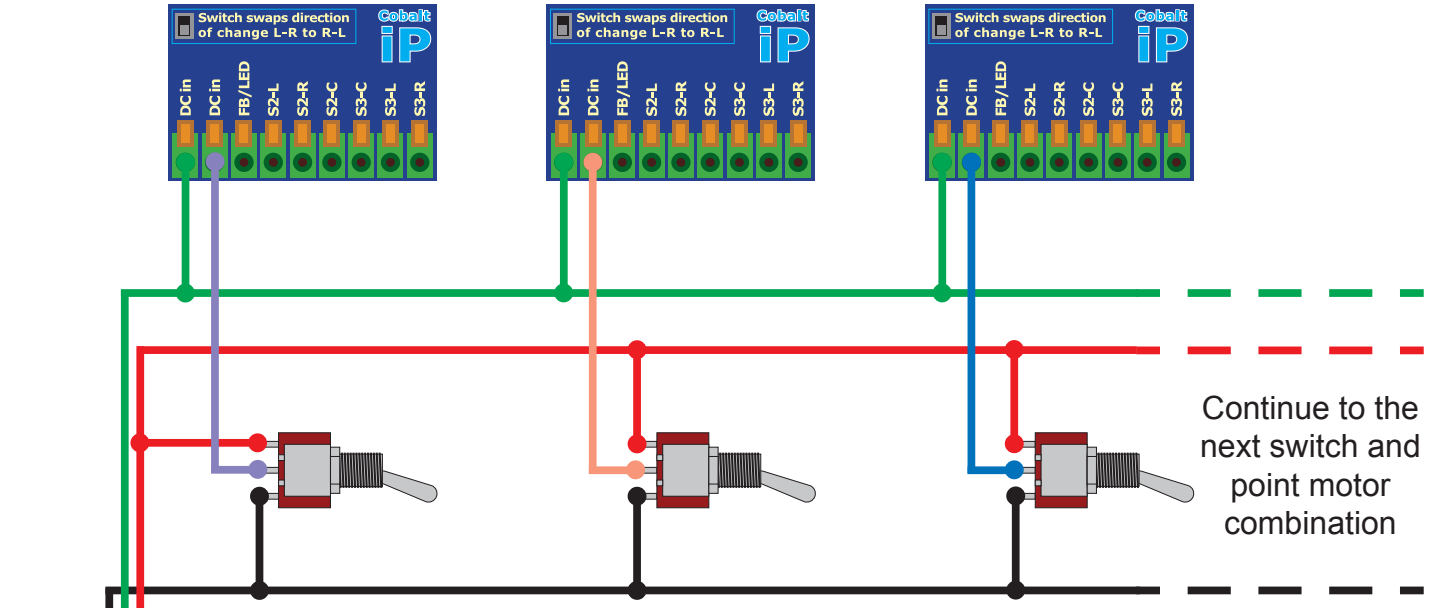

Continue to the next switch and point motor combination

ESP Toggle Switch 6-Pack
of On-On Toggle Switches
DCD-ETS

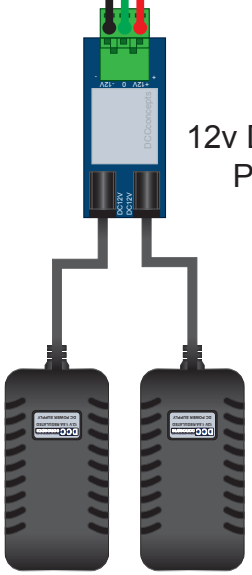

12v DC Split Power Supply Kit including
PCB and 2x Universal Wall Plugs
DCP-SPS12

Use different colour feeds to each point motor will help if you need to fault-find, i.e. DCW-DSORG50 Orange and 6 other colours including green, red and black