LAYOUT CONCEPTS
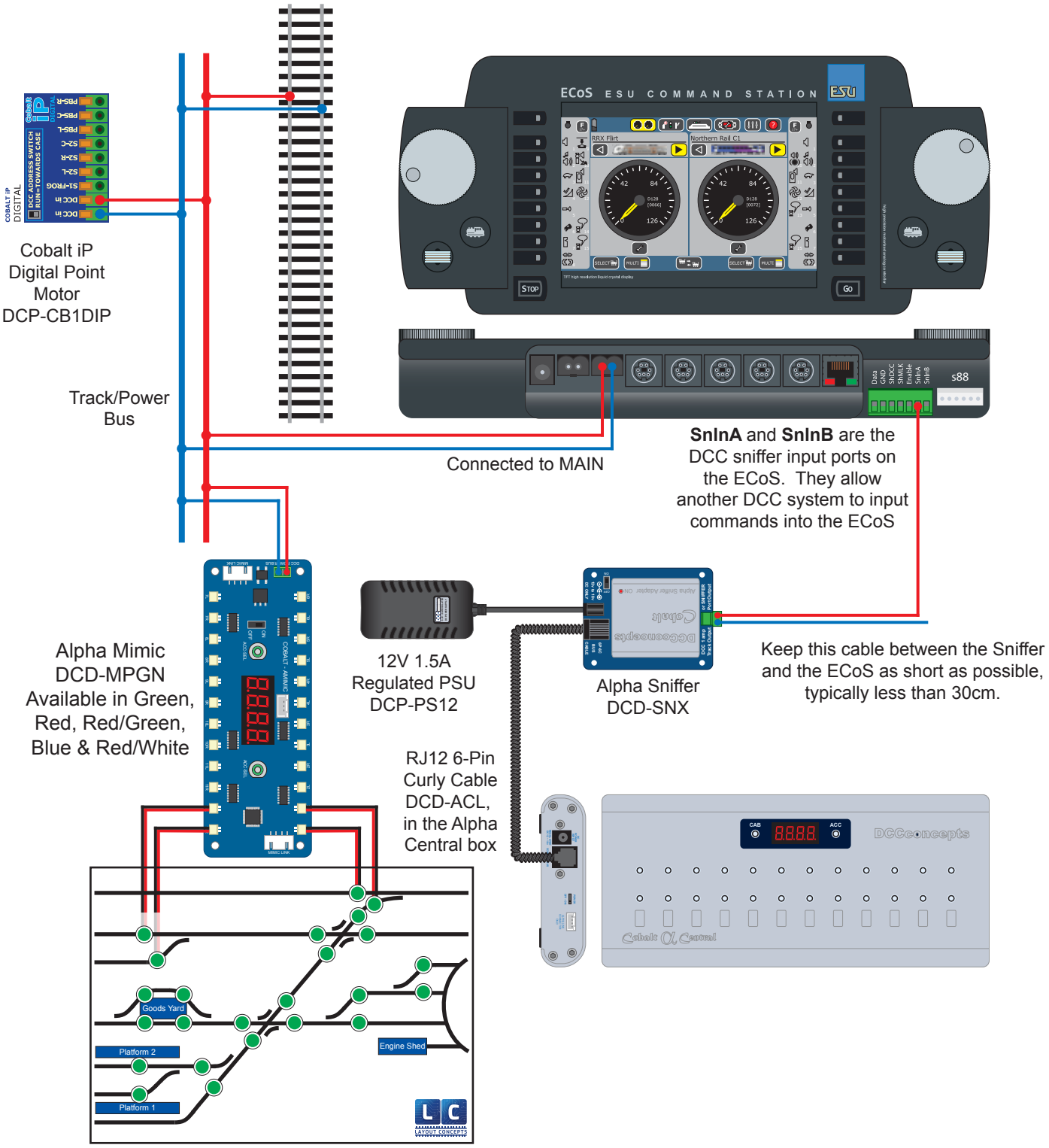
ECoS Command Station With Alpha Mimic& Alpha Sniffer & Alpha Central