LAYOUT CONCEPTS

Cobalt iP Digital Point Motor Controlled By Push Switches & 12V Regulated DC PSU & LED Indication

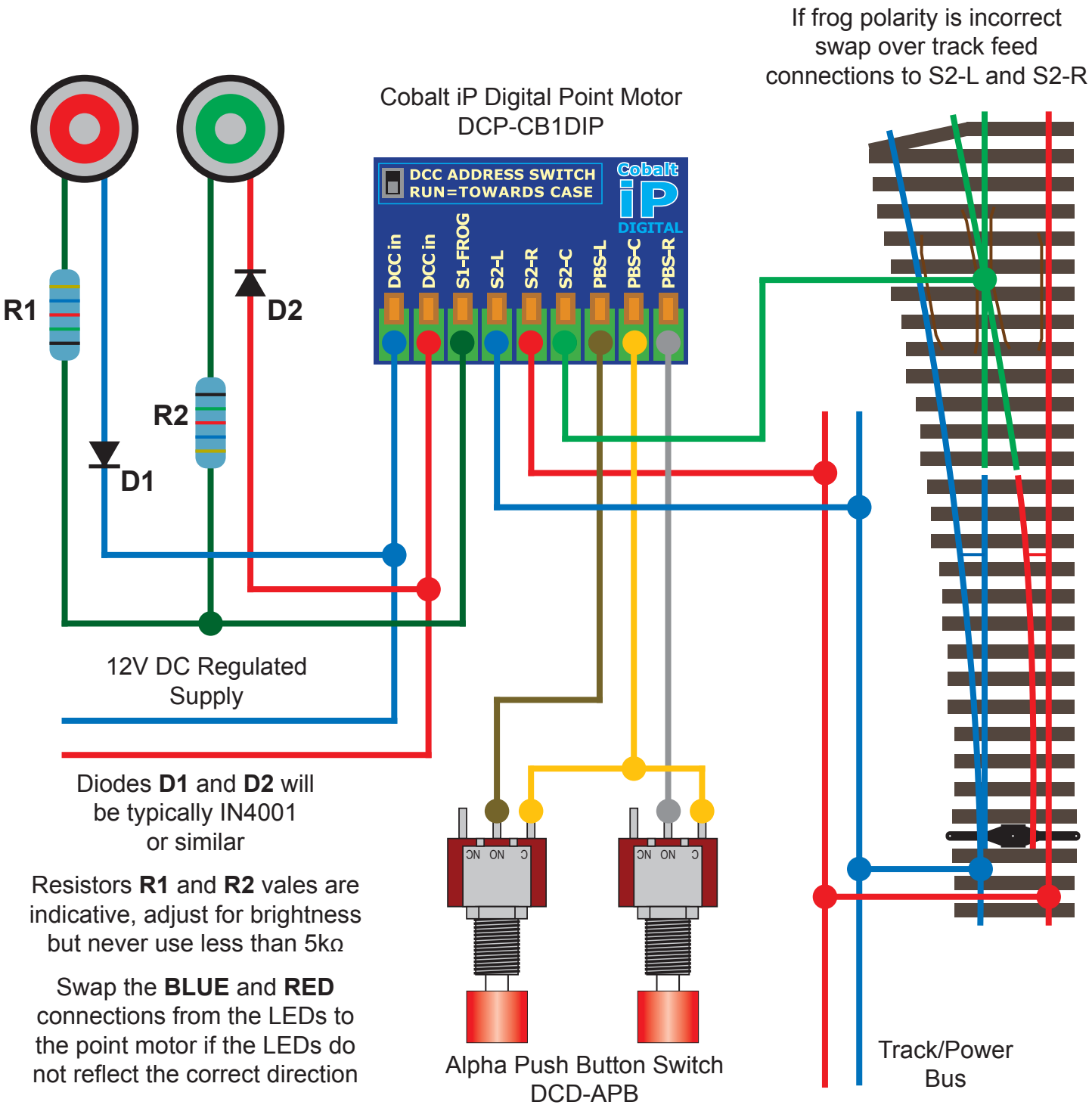

Layout Concepts Ltd, Unit E, The Sidings, Settle, BD24 9RP, United Kingdom - www.layoutconcepts.com - +44 (0) 1729 821 080 - sales@layoutconcepts.com