LAYOUT CONCEPTS
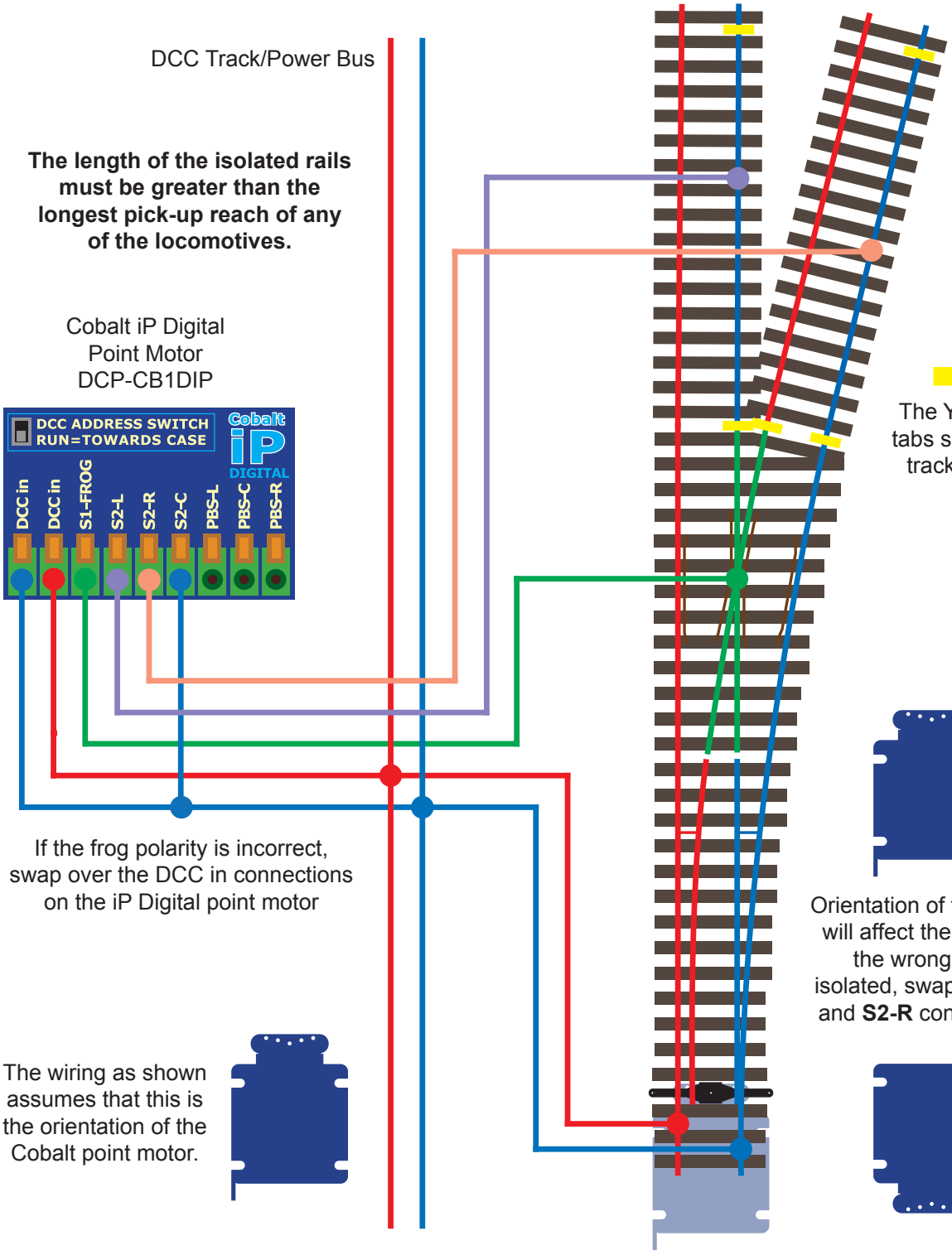
Cobalt iP Digital Point Motor Protection By Rail Isolation