LAYOUT CONCEPTS
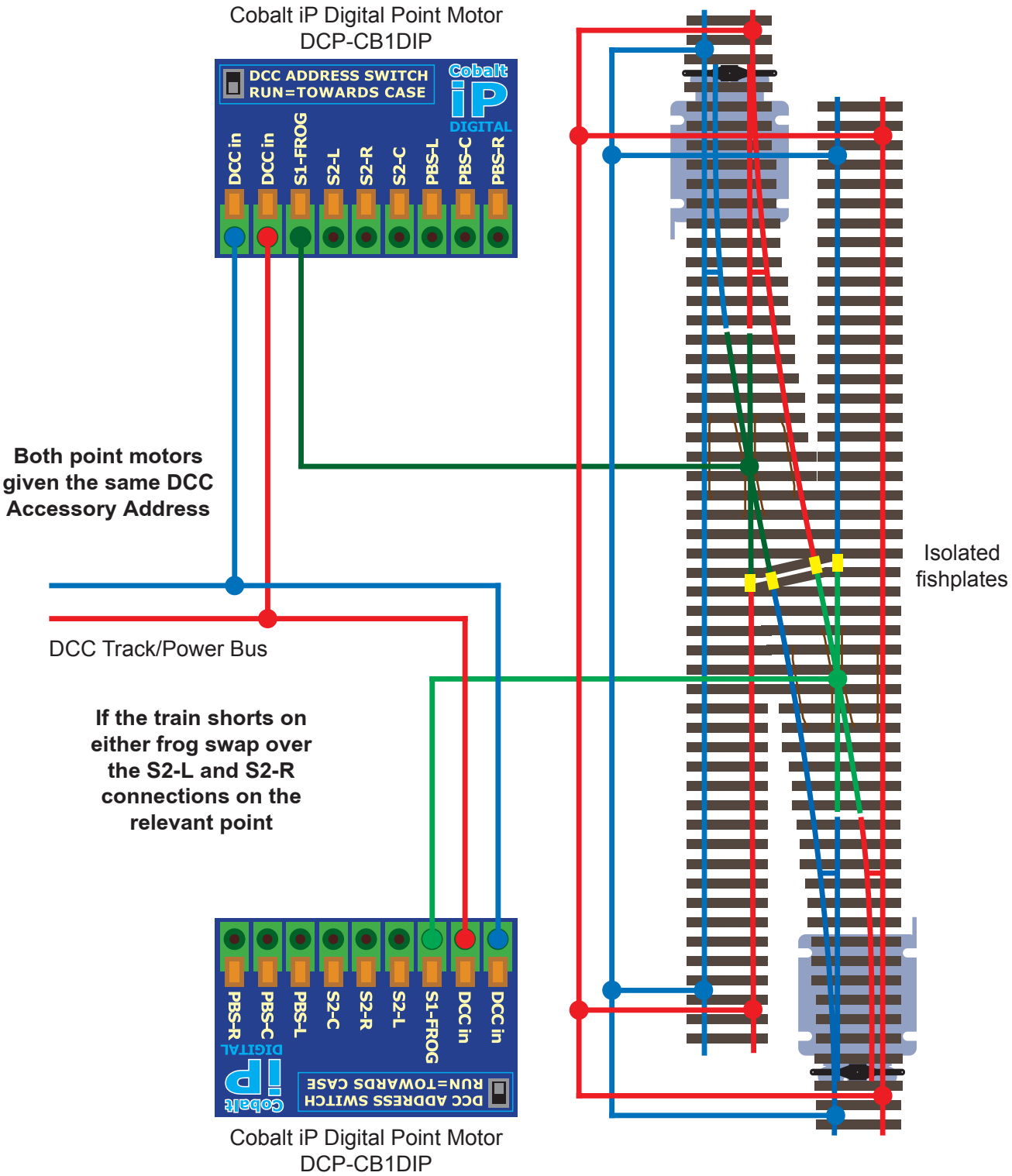
Cobalt iP Digital Points Motors Controlling A Crossover