LAYOUT CONCEPTS
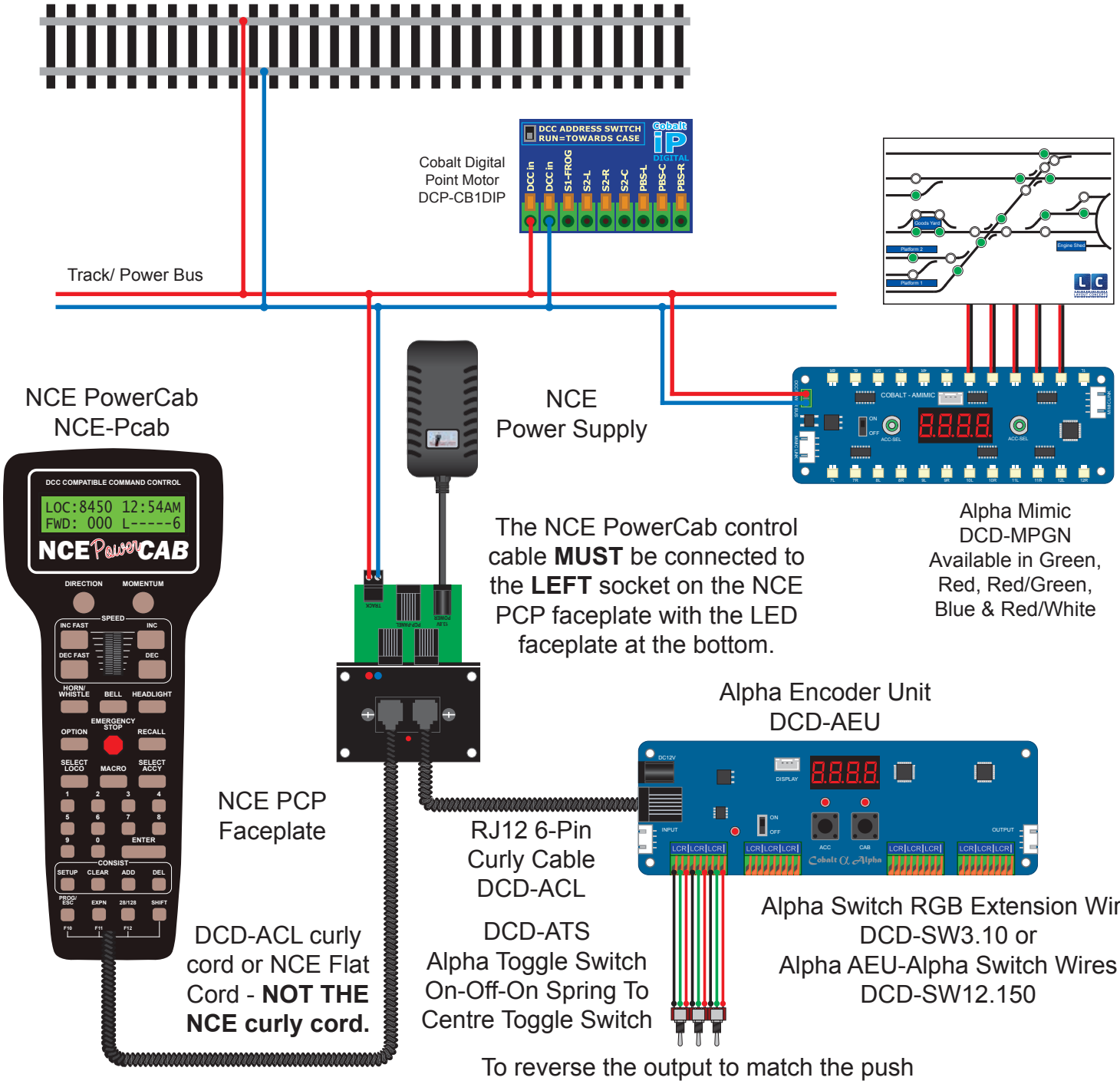
NCE PowerCab & Alpha Encoder Unit & Alpha Mimic Board & ATS Toggle Switches