LAYOUT CONCEPTS
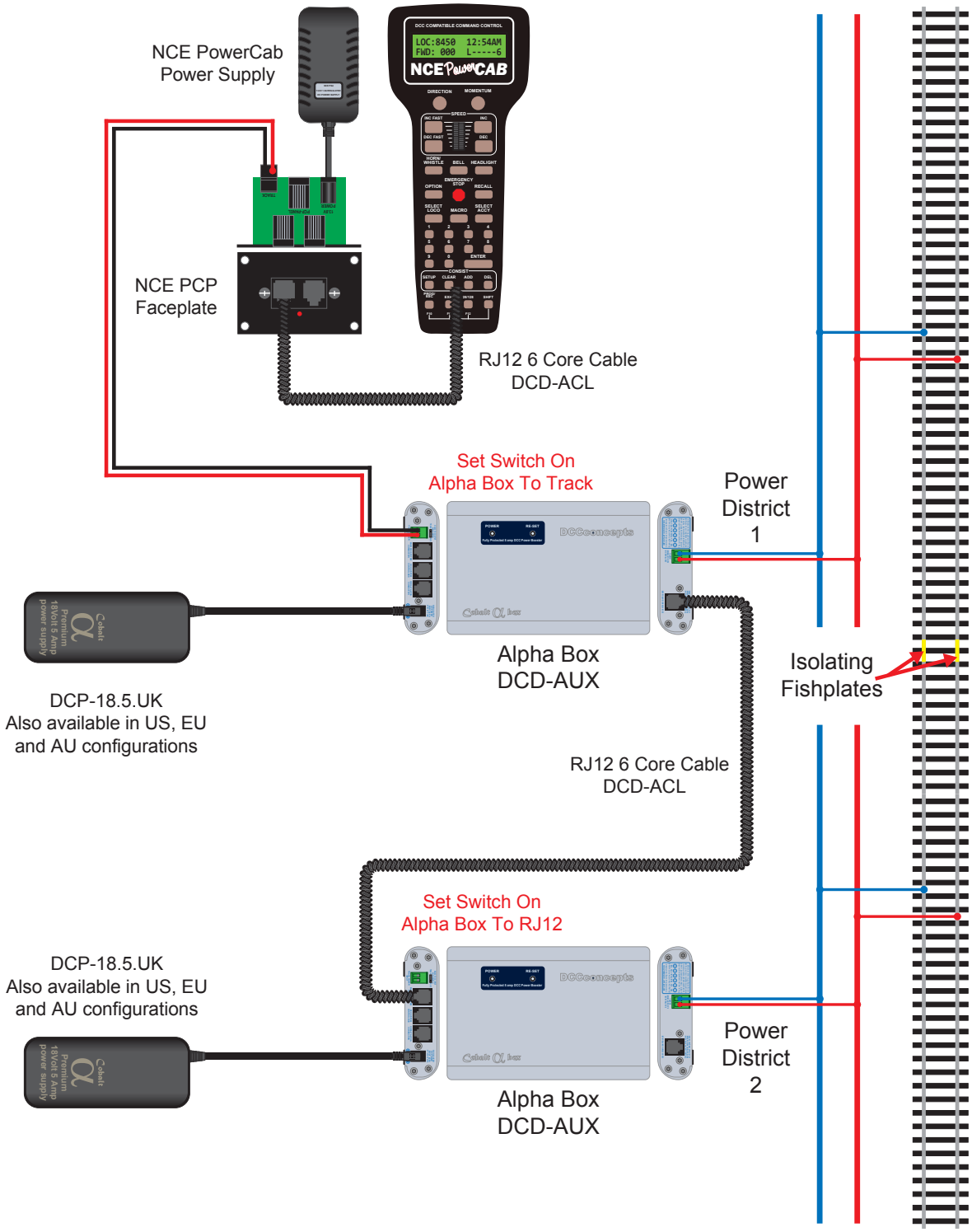
NCE PowerCab With Multiple 18V Regulated DC PSUs & Alpha Boxes Option 3