LAYOUT CONCEPTS
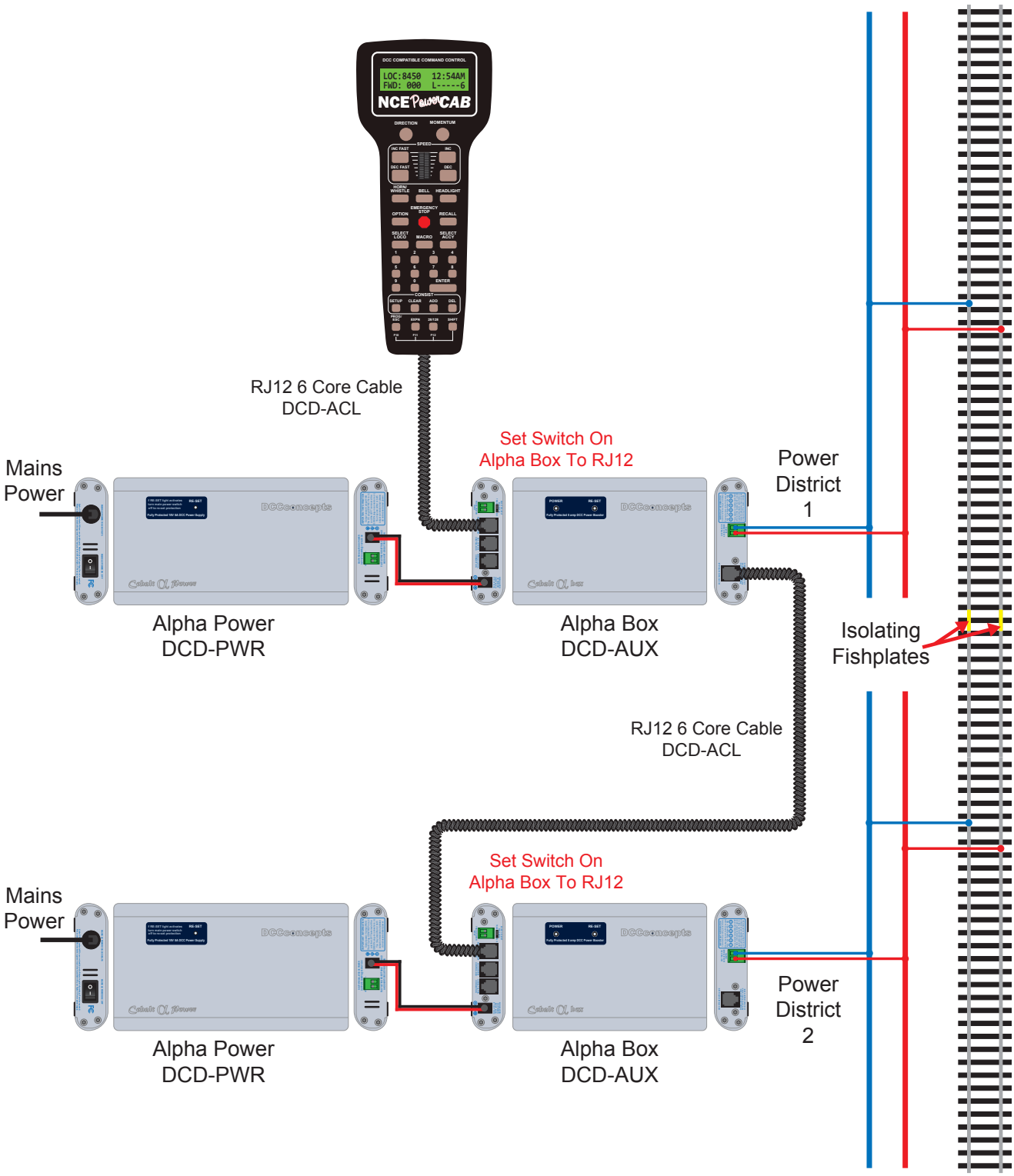
NCE PowerCab With Multiple Alpha Powers & Alpha Boxes Option 2