LAYOUT CONCEPTS
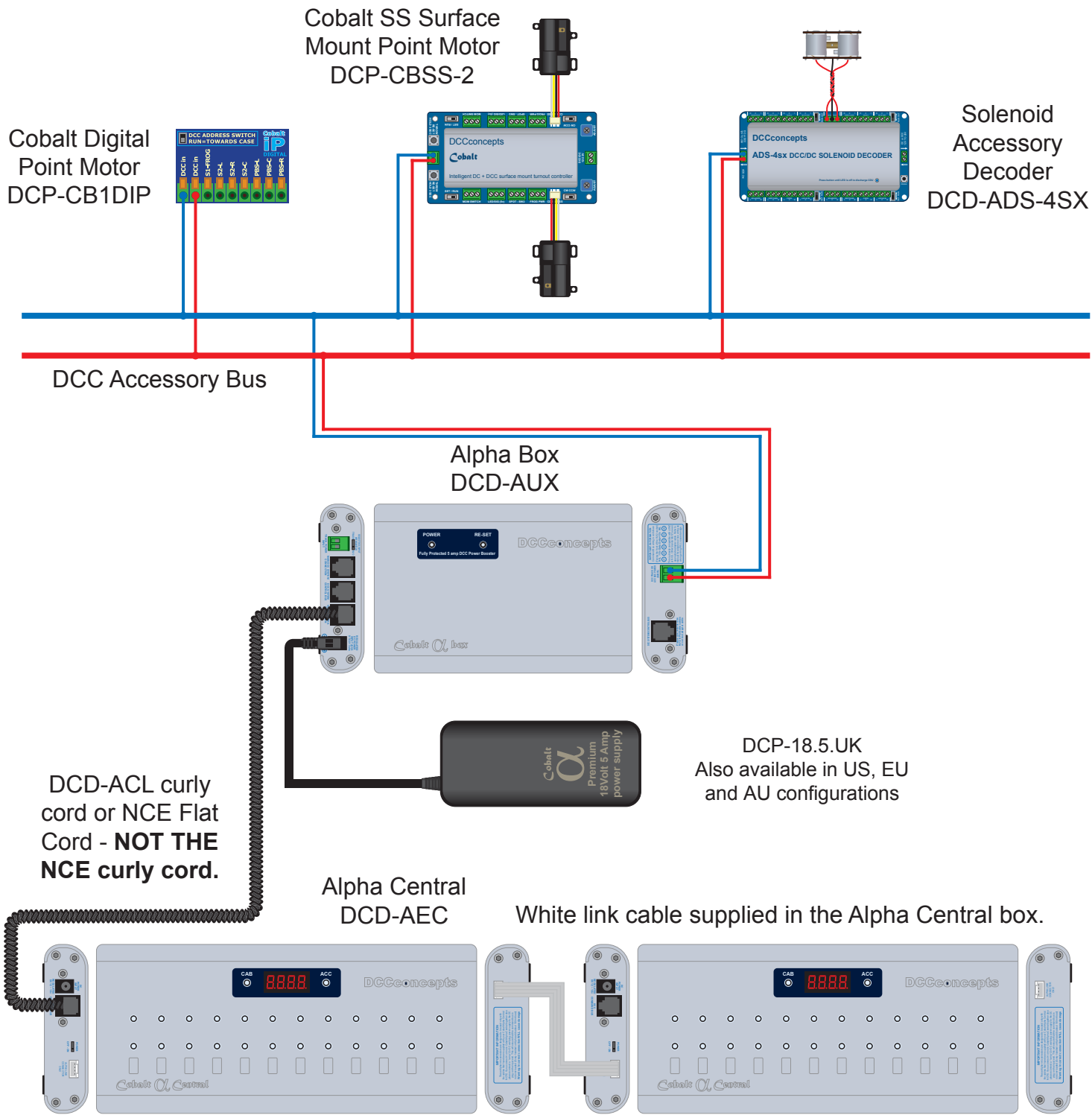
Separate Accessory Bus With Alpha Box & 18V Regulated DC PSU & Alpha Central