LAYOUT CONCEPTS
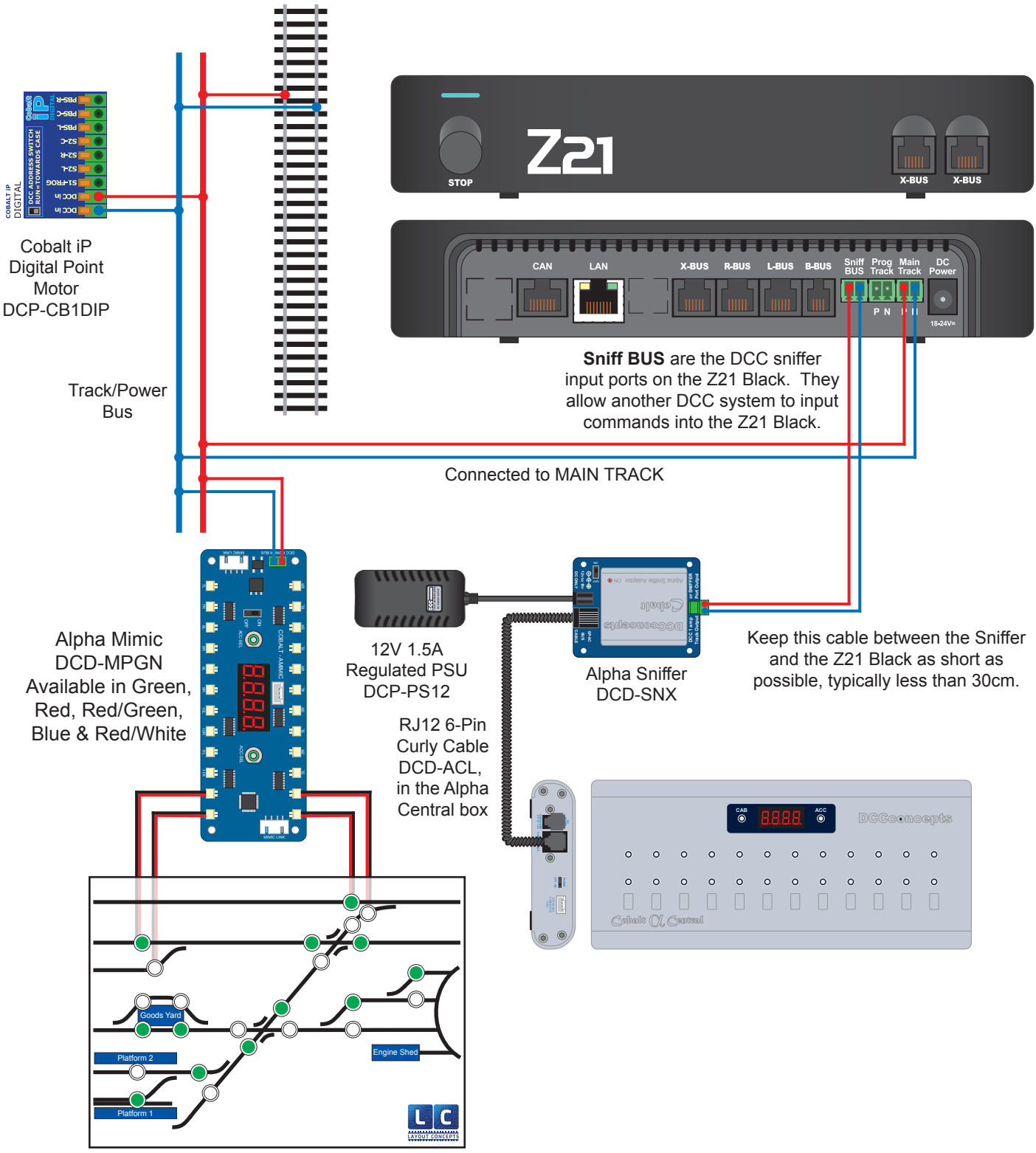
Roco Z21 Black With Alpha Mimic & Sniffer & Alpha Central